PLPCOS 450D

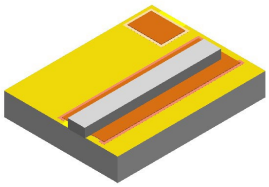

Chip on Submount

Blue Laser Die on Submount,
Emitter width 45 µm, 450 nm, 5 W

Submount & chip with bondable metallization
Submount with solderable backside

Applications

- Electronic Equipment
- Laser Material Processing
- Projection Home LED & Laser
- Projection Professional LED & Laser
- Stage Lighting (LED & Laser)

Features:

- Qualifications: Depending on the mode of operation, these devices emit highly concentrated visible light which can be hazardous to the human eye. Products which incorporate these devices have to follow the safety precautions found in IEC 60825 “Safety of laser products”.
- Optical output power (continuous wave): 5 W (T_S = 25°C)
- Typical emission wavelength: 447 nm
- Efficient radiation source for cw and pulsed operation
- Chip on electrical insulated submount

Maximum Ratings

Parameter	Symbol		Values
Operating temperature [1] ($T_{heatsink}$)	T_{op}	min. max.	-20 °C 80 °C
Storage temperature	T_{stg}	min. max.	-40 °C 85 °C
Junction temperature [1]	T_j	max.	135 °C
Output power	P_{opt}	max.	7 W
Operating current	I_{op}	max.	4 A
Reverse voltage [2]	V_R	max.	2 V
Soldering temperature t_{max} = 10 s	T_S	max.	260 °C
Soldering/ holding temperature 1: T_{S_max} = 160 °C at t_{max} = 1000 s			
Soldering temperature 2: T_{S_max} = 220 °C at t_{max} = 100 s			

Operation outside these conditions may damage the device. Operation at maximum ratings may influence lifetime.

Characteristics

P_{opt} = 5 W; $T_{heatsink}$ = 25 °C; cw operation

Parameter	Symbol		Values
Operating current	I_{op}	typ. max.	3 A 3.9 A
Peak wavelength [3]	λ_{peak}	min. typ. max.	435 nm 447 nm 458 nm
Beam divergence parallel to pn-junction (full width at 95% power content)	$\Theta_{\parallel}$	typ.	10 °
Beam divergence perpendicular to pn-junction (full width at 95% power content)	$\Theta_{\perp}$	typ.	52 °
Total conversion efficiency	η_{tot}	typ.	38 %
Slope efficiency	η	typ.	2 W / A
Threshold current	I_{th}	typ. max.	0.30 A 0.45 A
Forward voltage [4]	V_F	typ. max.	4.3 V 5.1 V
TE polarization	P_{TE}	typ.	100:1
Thermal resistance junction case real [1]	R_{thJC}	typ.	6.2 K / W

The specified values in cw-mode (continuous wave mode) imply a suitable mounting technology with a resulting thermal resistance of Rth ~ 6.2 K/W. The laser characteristics, power and lifetime of the laser depend on customer mounting and operation conditions. The environmental atmosphere of the laser has an strong impact to the lifetime due to the material deposition on the laser facet, caused by the blue laser light material absorption effect. Therefore, OSRAM highly recommends customer to test and verify the specific operation point based on their own application requirements. Depending on customer specific reliability requirements, a derating of output power and/or operating temperature is necessary.

Relative Spectral Emission [5), 6)]

$P_{opt} = f(\lambda)$; $P_{opt} = 5$ W

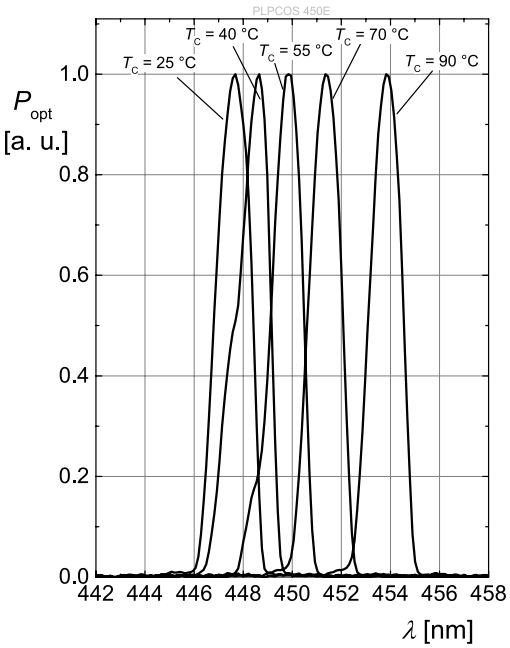

Optical Output Power [5), 6)]

$P_{opt} = f(I_F)$

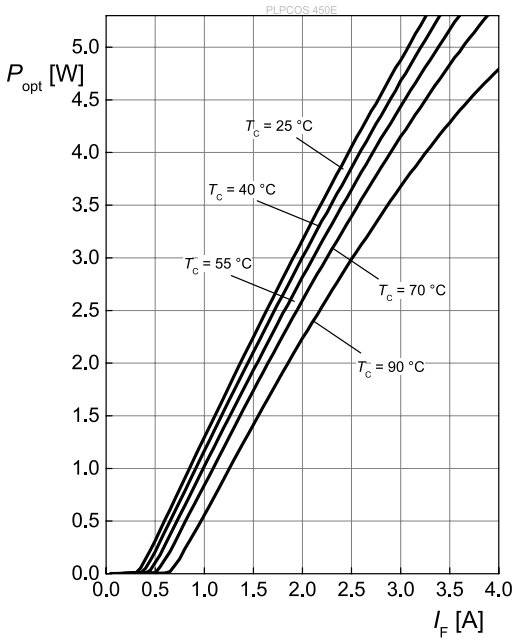

Forward Voltage [5), 6)]

$V_F = f(I_F)$

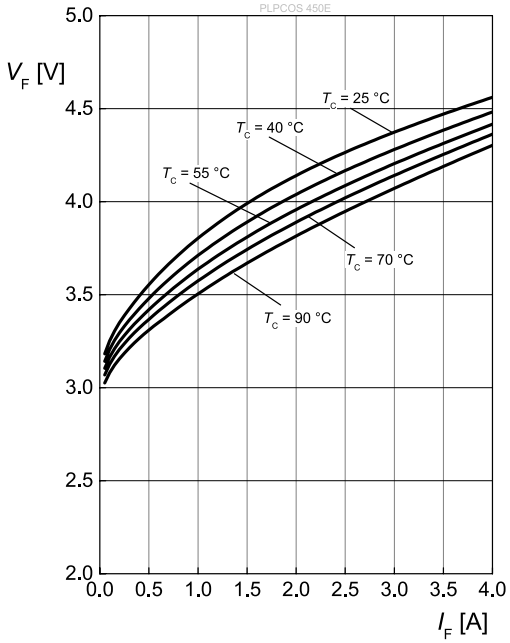

Threshold Current

$I_{th} = f(T_S)$

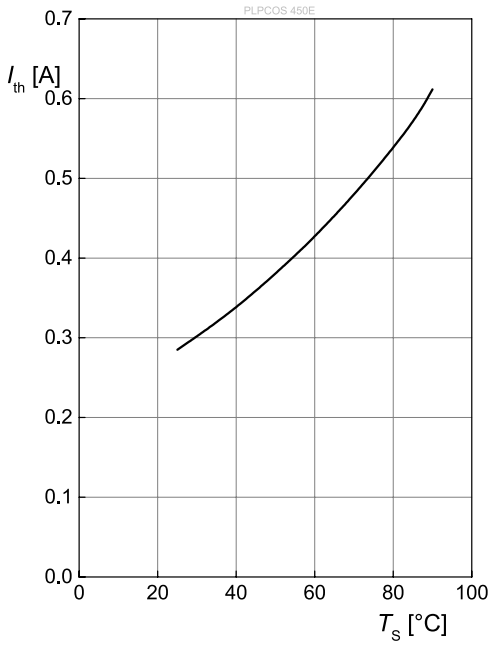

Peak Wavelength

$\lambda_{peak} = f(I_F)$

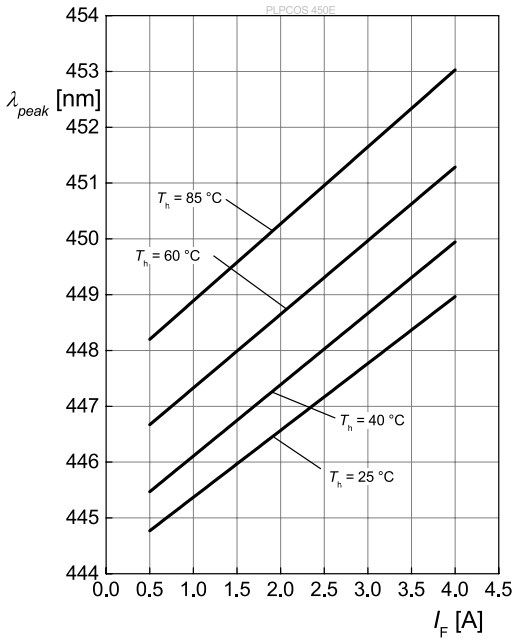

Dimensional Drawing [7)]

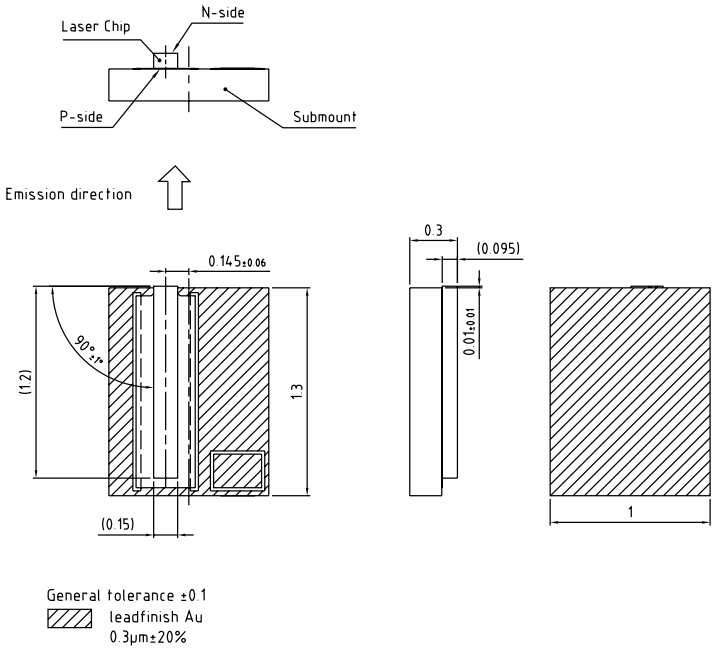

C67062-A0227-A3-03

Dimensional Drawing [7)]

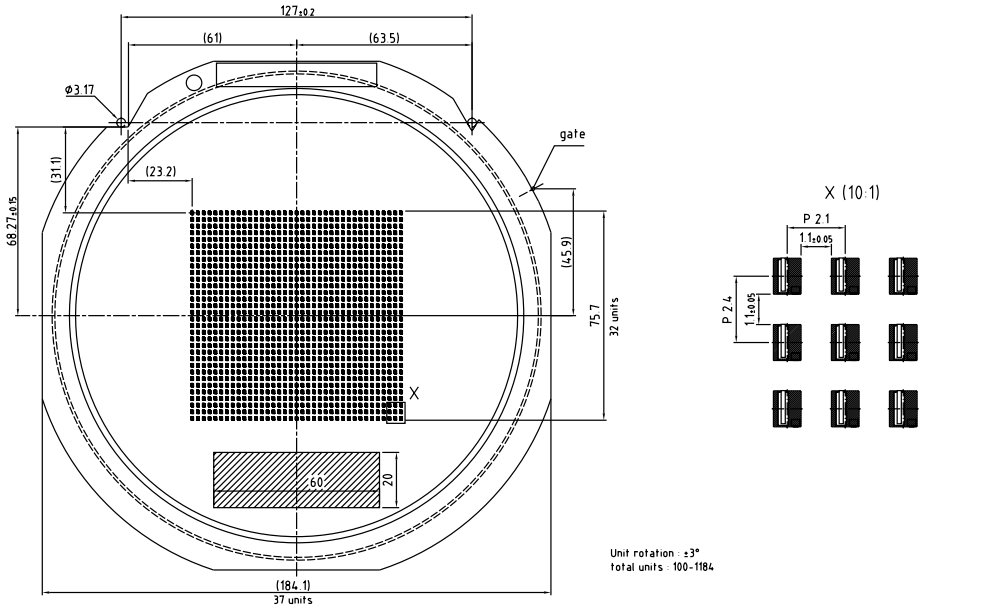

C67062-A0227-B10-02

Further Information:

Approximate Weight: 0.2 mg

Tray [7)]

pieces per tray

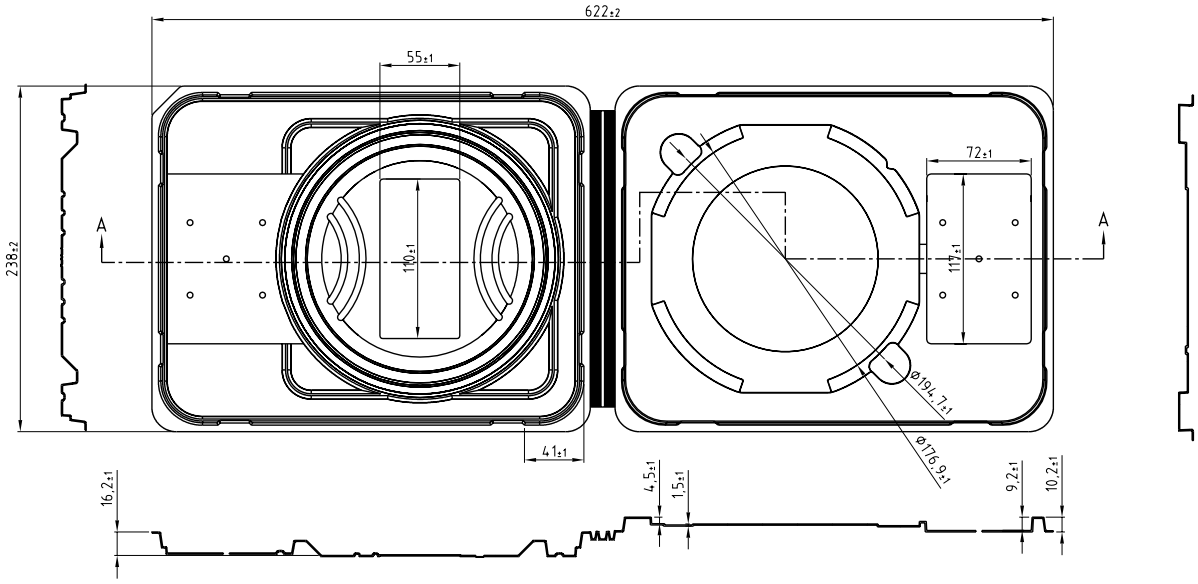

C63062-A4333-X1-03

Dry Packing Process and Materials

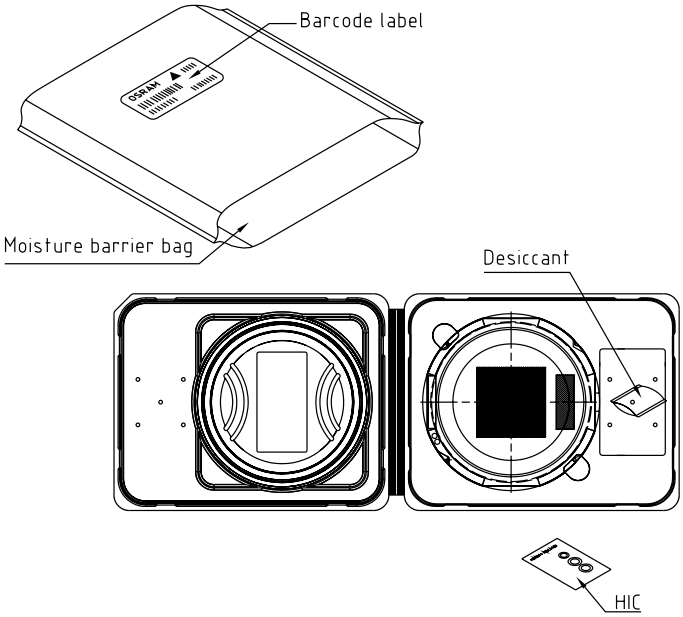

C67062-A0227-B11-01

Notes

Depending on the mode of operation, these devices emit highly concentrated visible and non visible light which can be hazardous to the human eye. Products which incorporate these devices have to follow the safety precautions given in IEC 60825-1.

Subcomponents of this device contain, in addition to other substances, metal filled materials including silver. Metal filled materials can be affected by environments that contain traces of aggressive substances. Therefore, we recommend that customers minimize device exposure to aggressive substances during storage, production, and use. Devices that showed visible discoloration when tested using the described tests above did show no performance deviations within failure limits during the stated test duration. Respective failure limits are described in the IEC60810.

Important notes of operation for laser diode

a) Electrical operation
OSRAMs laser diodes are designed for maximum performance and reliability. Operating the laser diode above the maximum rating even for very short periods of time can damage the laser diode or reduce its lifetime. The laser diode must be operated with a suitable power supply with minimized electrical noise. The laser diode is very sensitive to electrostatic discharge (ESD). Proper precautions must be taken.

b) Mounting instructions
In order to maintain the lifetime of the laser diode proper heat management is essential. Due to the design of the laser diode heat is dissipated only through the base plate of the diode‘s body. A proper heat conducting interconnection between the diodes base plate and the heat sink must be maintained.

Handling:
Solvents, water, liquids, non-conductive plastics and glues are not allowed near the device, because solvents and other liquids could emerge and damage the product.

For further application related information please visit www.osram-os.com/appnotes

Disclaimer

OSRAM OS assumes no liability whatsoever for any use of this document or its content by recipient including, but not limited to, for any design in activities based on this preliminary draft version. OSRAM OS may e.g. decide at its sole discretion to stop developing and/or finalising the underlying design at any time.

Attention please!
The information describes the type of component and shall not be considered as assured characteristics. Terms of delivery and rights to change design reserved. Due to technical requirements components may contain dangerous substances.
For information on the types in question please contact our Sales Organization.
If printed or downloaded, please find the latest version on the OSRAM OS website.

Packing
Please use the recycling operators known to you. We can also help you – get in touch with your nearest sales office. By agreement we will take packing material back, if it is sorted. You must bear the costs of transport. For packing material that is returned to us unsorted or which we are not obliged to accept, we shall have to invoice you for any costs incurred.

Product and functional safety devices/applications or medical devices/applications
OSRAM OS components are not developed, constructed or tested for the application as safety relevant component or for the application in medical devices.
OSRAM OS products are not qualified at module and system level for such application.

In case buyer – or customer supplied by buyer – considers using OSRAM OS components in product safety devices/applications or medical devices/applications, buyer and/or customer has to inform the local sales partner of OSRAM OS immediately and OSRAM OS and buyer and /or customer will analyze and coordinate the customer-specific request between OSRAM OS and buyer and/or customer.

Glossary

1) **Solderpoint temperatures:** Solderpoint temperature Tsolderpoint is the temperature at bottom side of the submount. The maximum junction temperature Tj must not be exceeded. The allowed operation conditions and cw performance are influenced by thermal connection of CoS to heatsink.

2) **Reverse Operation:** This product is intended to be operated applying a forward current within the specified range. Applying any continuous reverse bias or forward bias below the voltage range of light emission shall be avoided because it may cause migration which can change the electro-optical characteristics or damage the LED.

3) **Wavelength:** The wavelengths are measured with a tolerance of ±1 nm.

4) **Forward Voltage:** The forward voltages are measured with a tolerance of ±0.1 V.

5) **Typical Values:** Due to the special conditions of the manufacturing processes of semiconductor devices, the typical data or calculated correlations of technical parameters can only reflect statistical figures. These do not necessarily correspond to the actual parameters of each single product, which could differ from the typical data and calculated correlations or the typical characteristic line. If requested, e.g. because of technical improvements, these typ. data will be changed without any further notice.

6) **Testing temperature:** TA = 25°C (unless otherwise specified)

7) **Tolerance of Measure:** Unless otherwise noted in drawing, tolerances are specified with ±0.1 and dimensions are specified in mm.

Revision History

Version	Date	Change
0.0	2020-01-23	Dimensional Drawing Tray Dry Packing Process and Materials
0.1	2021-11-23	Product Image Features Ordering Information Maximum Ratings Characteristics Electro - Optical Characteristics (Diagrams) Derating (Diagrams) Dimensional Drawing

Published by OSRAM Opto Semiconductors GmbH
Leibnizstraße 4, D-93055 Regensburg
www.osram-os.com © All Rights Reserved.

EU RoHS and China RoHS compliant product

此产品符合欧盟 RoHS 指令的要求；
按照中国的相关法规和标准，不含有毒有害物质或元素。

OSRAM
Opto Semiconductors